MX-175

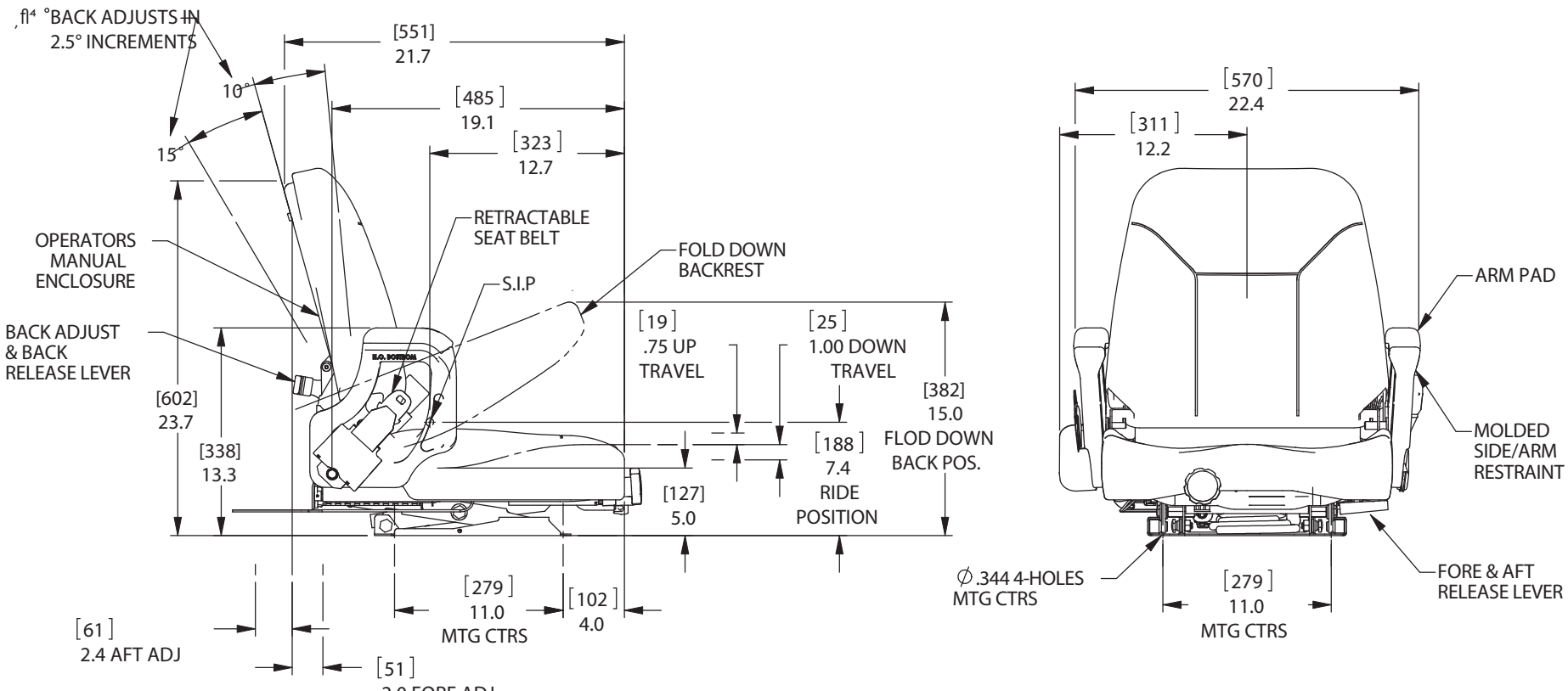
BACK ADJUSTS IN
2.5° INCREMENTS
10°
15°
[551]
21.7
[485]
19.1
[323]
12.7
OPERATORS
MANUAL
ENCLOSURE
RETRACTABLE
SEAT BELT
S.I.P
FOLD DOWN
BACKREST
BACK ADJUST
& BACK
RELEASE LEVER
[19]
.75 UP
TRAVEL
[25]
1.00 DOWN
TRAVEL
[382]
15.0
FLOD DOWN
BACK POS.
[602]
23.7
[338]
13.3
[188]
7.4
RIDE
POSITION
[127]
5.0
[279]
11.0
MTG CTRS
[102]
4.0
[61]
2.4 AFT ADJ
[51]
2.0 FORE ADJ
[570]
22.4
[311]
12.2
ARM PAD
MOLDED
SIDE/ARM
RESTRAINT
∅.344 4-HOLES
MTG CTRS
[279]
11.0
MTG CTRS
FORE & AFT
RELEASE LEVER